2154.804/180

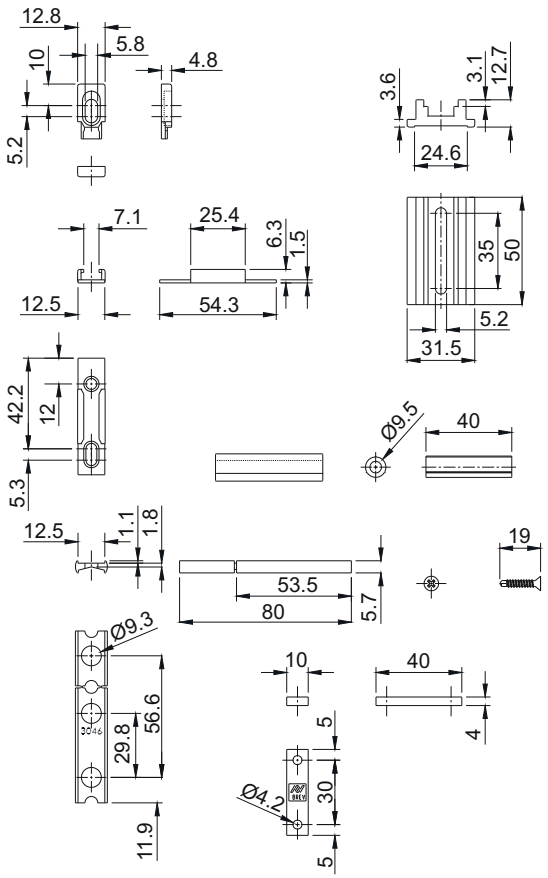
12.8
10
5.2
5.8
4.8
3.6
24.6
3.1
12.7
7.1
12.5
25.4
54.3
6.3
1.5
35
50
31.5
5.2
42.2
12
5.3
Ø9.5
40
12.5
1.1
1.8
53.5
80
5.7
19
Ø9.3
29.8
56.6
11.9
10
40
4
5
30
Ø4.2
5