1146.13/62.5/ 1146.13/84

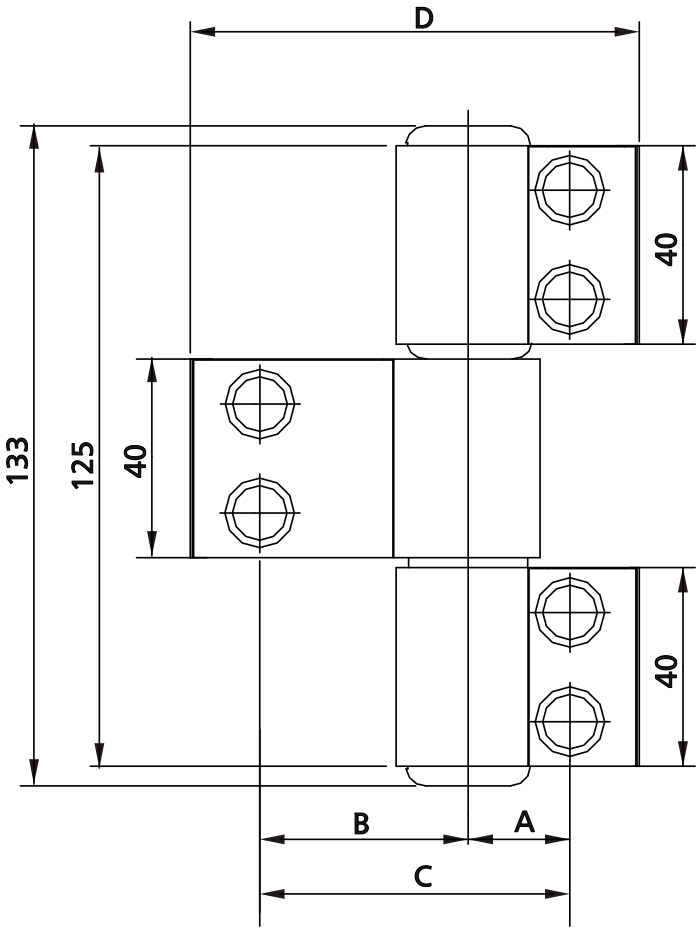

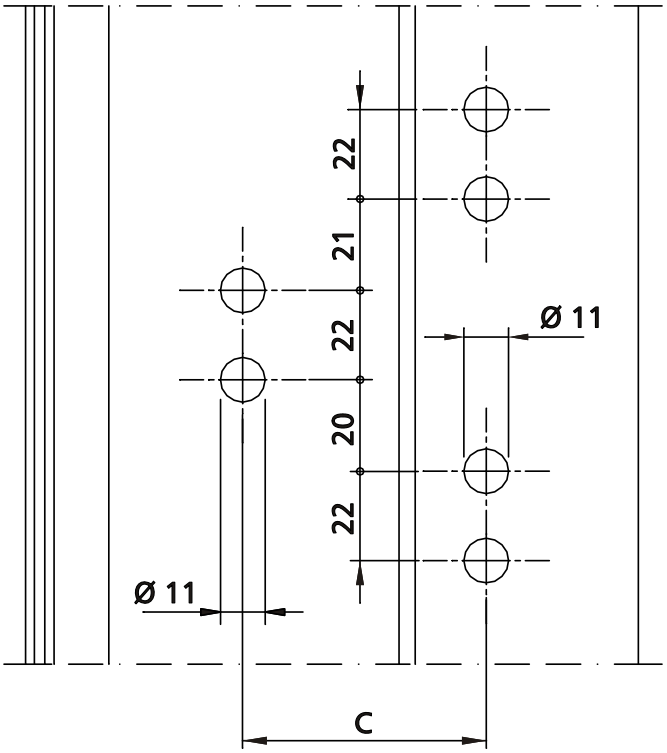

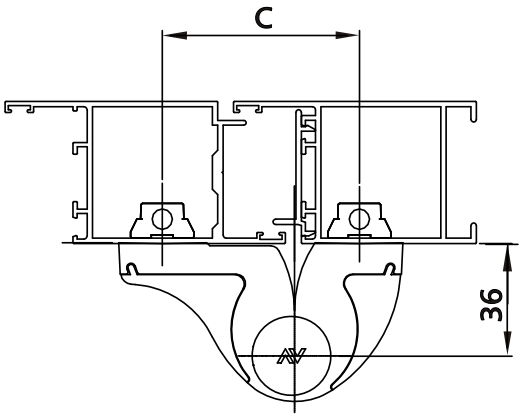

Art.	A	B	C	D
1146.13/62.5	20,5	42	62,5	90,5
1146.13/84	42	42	84	112